DS 201P

Electronic Pressure Switch

Pressure Port With
Flush Welded Stainless Steel Diaphragm

accuracy according to IEC 60770:
0.5 % FSO

Nominal pressure

from 0 ... 60 bar up to 400 bar

Contacts

1, 2 or 4 independent PNP contacts,
freely configurable

Analogue output

2-wire: 4 ... 20 mA
3-wire: 4 … 20 mA / 0 … 10 V
others on request

Special characteristics

- indication of measured values on a 4-digit LED display
- rotatable and configurable display module

Optional versions

- **IS-version**
  Ex ia = intrinsically safe for gases
- cooling element up to 300 °C
- customer specific versions

The electronic pressure switch DS 201P is the successful combination of

- intelligent pressure switch
- digital display

and is designed for universal applications in the mechanical engineering and other industries where a flush stainless steel diaphragm is necessary. This can be the case, for example, with higher viscous or slightly contaminated fluids. For usage with higher media temperature optionally a cooling element up to 300 °C is available.

Preferred areas of use are

Plant and Machine Engineering

Food Industry

Preferred used for

Viscous and pasty media

BD SENSORS GmbH
BD-Sensors-Straße 1
D - 95199 Thierstein

Telefon +49 (0) 92 35 / 98 11- 0
Telefax +49 (0) 92 35 / 98 11- 11

www.bdsensors.com
info@bdsensors.de

Input pressure ranges					
Nominal pressure gauge/abs. [bar]	60	100	160	250	400
Overpressure [bar]	100	200	400	400	600
Burst pressure ≥ [bar]	120	250	500	500	650

Contact [1]	
Standard	1 PNP contact
Options	2 independent PNP contacts 4 independent PNP contacts (possible with M12x1, 8-pin for 4 ... 20 mA/3-wire; 0 ... 10 V/3-wire on request)
Max. switching current	4 ... 20 mA / 2- and 3-wire: contact rating 125 mA, short-circuit resistant; $V_{switch} = V_S - 2V$ 0 ... 10 V / 3-Leiter: contact rating 500 mA, short-circuit resistant
Accuracy of contacts[2]	≤ ± 0.5 % FSO
Repeatability	≤ ± 0.2 % FSO
Switching frequency	max. 10 Hz
Switching cycles	> 100 x 10^6
Delay time	0 ... 100 sec

[1] max. 1 contact for 2-wire current signal with plug ISO 4400 as well as 2-wire current signal with Ex-protection no contact possible with 3-wire in combination with plug ISO 4400
[2] accuracy according to IEC 60770 – limit point adjustment (non-linearity, hysteresis, repeatability)

Analogue output (optionally) / Supply	
2-wire current signal	4 ... 20 mA / V_S = 13 ... 36 V_{DC} permissible load: $R_{max} = [(V_S - V_{S\,min}) / 0.02\ A]\ \Omega$ response time: < 10 msec
2-wire current signal with Ex-protection	4 ... 20 mA / V_S = 13 ... 28 V_{DC} permissible load: $R_{max} = [(V_S - V_{S\,min}) / 0.02\ A]\ \Omega$ response time: < 10 msec
3-wire current signal	4 ... 20 mA / V_S = 19 ... 30 V_{DC} adjustable (turn-down of span max. 1:5) [3] permissible load: R_{max} = 500 Ω response time: < 0.5 sec
3-wire voltage signal	0 ... 10 V / V_S = 15 ... 36 V_{DC} permissible load: R_{min} = 10 kΩ response time: < 10 msec
without analogue output	V_S = 15 ... 36 V_{DC}
accuracy [2]	≤ ± 0.5 % FSO

[3] with turn-down of span the analogue signal is adjusted automatically to the new measuring range

Thermal error (offset and span) [4] / Permissible temperatures			
Thermal error	≤ ± 0.2 % FSO / 10 K		
in compensated range	-20 ... 85°C		
Permissible temperatures [5]	medium:	-40 ... 125 °C for filling fluid silicon oil -10 ... 125 °C for filling fluid food compatible oil	
	electronics / environment:	-40 ... 85 °C	
	storage:	-40 ... 100 °C	
Permissible temperature medium for cooling element 300°C	filling fluid silicon oil	overpressure: -40 … 300 °C	vacuum: -40 ... 150 °C
	filling fluid food compatible oil	overpressure: -10 ... 250 °C	vacuum: -10 ... 150 °C

[4] an optional cooling element can influence thermal effects for offset and span depending on installation position and filling conditions
[5] max. temperature of the medium for overpressure > 0 bar: 150 °C for 60 minutes with a max. environmental temperature of 50 °

Electrical protection	
Short-circuit protection	permanent
Reverse polarity protection	no damage, but also no function
Electromagnetic compatibility	emission and immunity according to EN 61326

Mechanical stability		
Vibration	5 g RMS (25 ... 2000 Hz)	according to DIN EN 60068-2-6
Shock	100 g / 11 msec	according to DIN EN 60068-2-27

Filling fluids	
Standard	silicon oil
Optional	food compatible oil with FDA approval (Mobil DTE FM 32; Category Code: H1; NSF Registration No.: 130662) others on request

Materials	
Pressure port	stainless steel 1.4404 (316 L)
Housing	stainless steel 1.4404 (316 L)
Display housing	PA 6.6, Polycarbonate
Seals	standard: FKM (for media temperature ≤ 200 °C) option: FFKM [6] (for media temperature > 200 °C) others on request
Diaphragm	stainless steel 1.4435
Media wetted parts	pressure port, seals, diaphragm

[6] for pressure ranges P_N ≤ 100 bar

Explosion protection (only for 4 … 20 mA / 2-wire)	
Approval AX14-DS 201P	IBExU06ATEX1050 X zone 1: II 2G Ex ia IIC T4 Gb (connector) / II 2G Ex ia IIB T4 Gb (cable)
Safety technical maximum values	U_i = 28 V, I_i = 93 mA, P_i = 660 mW, C ≈ 0 nF, L_i ≈ 0 µH
Max. switching current [7]	70 mA (max. permissible inductivity: 4.7 mH)
Max. temperatures for environment	-25 ... 70 °C
Connecting cables (by factory)	cable capacitance: signal line/shield also signal line/signal line: 100 pF/m cable inductance: signal line/shield also signal line/signal line: 1 µH/m
[7] the real switching current in the application depends on the power supply unit	
Miscellaneous	
Display	4-digit, red 7-segment-LED display, digit height 7 mm, range of indication -1999 ... +9999; accuracy 0.1 % ± 1 digit; digital damping 0.3 … 30 sec (programmable); measured value update 0.0 … 10 sec (programmable)
Current consumption (without contacts)	2-wire signal output current: max. 25 mA 3-wire signal output current: approx. 45 mA + signal current 3-wire signal output voltage: approx. 45 mA
Ingress protection	IP 65
Installation position	any (standard calibration in a vertical position with the pressure port connection down)
Weight	min. 200 g (depending on mechanical connection)
Operational life	> 100 x 10^6 cycles
CE-conformity	EMC Directive: 2004/108/EC Pressure Equipment Directive: 97/23/EC (module A) [8]
ATEX Directive	94/9/EC
[8] This directive is only valid for devices with maximum permissible overpressure > 200 bar.	

Wiring diagrams

2-wire-system (current)

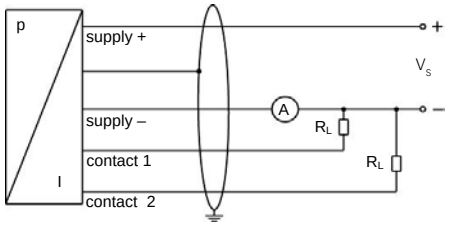

3-wire-system (current/voltage)

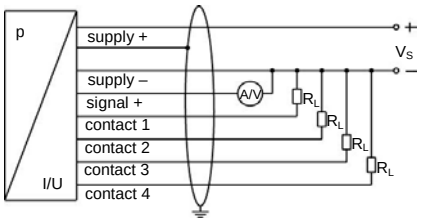

Pin configuration

Electrical connection	M12x plastic (5-pin)	M12x metal (5-pin)	M12x plastic (8-pin)	ISO 4400	Binder series 723 (5-pin)	cable colours (DIN 47100)
Supply +	1	1	1	1	3	wh (white)
Supply –	3	3	3	2	4	bn (brown)
Signal + (only for 3-wire)	2	2	2	3	5	gn (green)
Contact 1	4	4	4	3	2	gy (grey)
Contact 2	5	5	5	-	1	pk (pink)
Contact 3	-	-	6	-	-	-
Contact 4	-	-	7	-	-	-
Shield	via pressure port	plug housing/ pressure port	via pressure port	ground contact	plug housing/ pressure port	ye/gn (yellow/green)

Electrical connections (dimensions in mm)

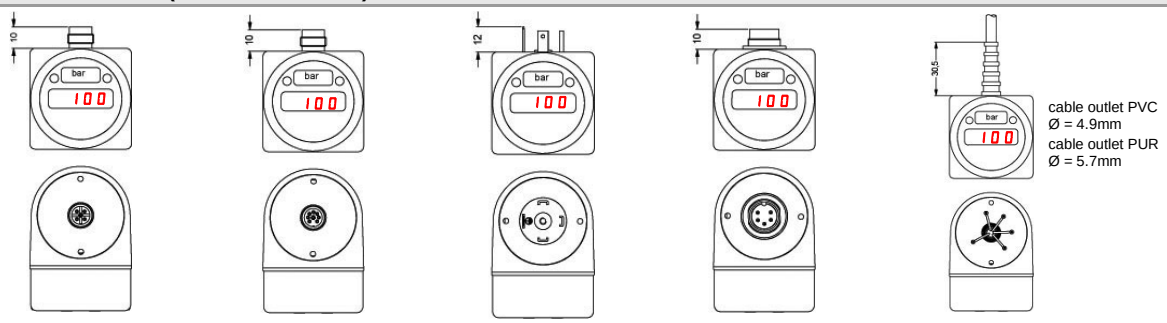

M12x1 (5-pin) | M12x1 (8-pin) | ISO 4400 | Binder series 723 (5-pin) | cable outlet [9]

[9] different cable types and lengths available, permissible temperature depends on kind of cable; standard: 2 m PVC cable (without ventilation tube, permissible temperature: -5 ... 70°C)

Mechanical connection (dimensions in mm)

Standard

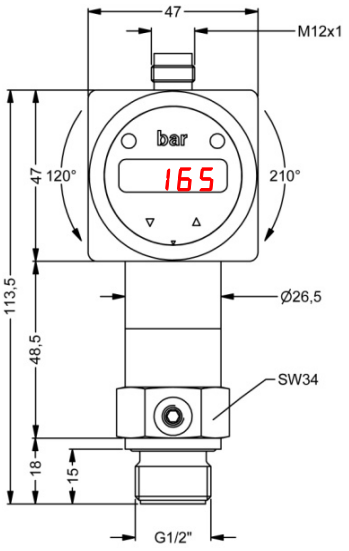

G1/2" flush

Optional

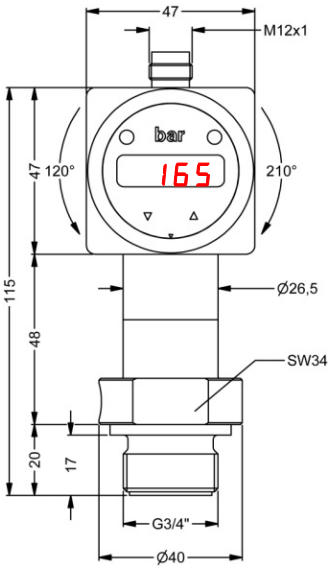

G3/4" flush

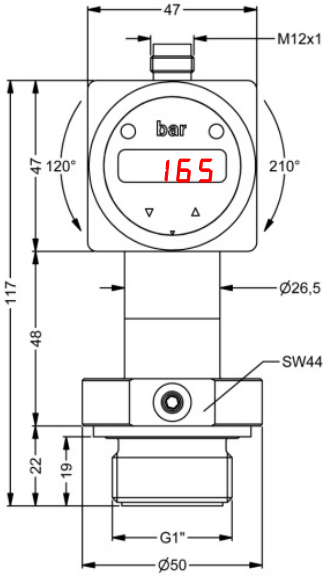

G1" flush

Optional

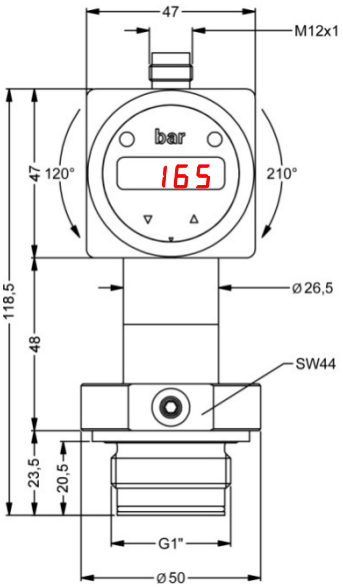

G1" flush
with radial o-ring

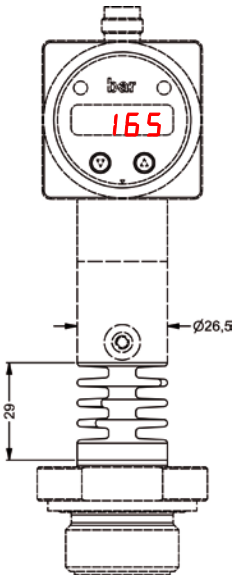

cooling element
300 °C [10]

⇨**metric threads and other versions on request**

[10] *for pressure ranges $P_N \leq 160$ bar*

This data sheet contains product specification, properties are not guaranteed. Subject to change without notice.

Telefon +49 (0) 92 35 / 98 11- 0
Telefax +49 (0) 92 35 / 98 11- 11
www.bdsensors.com
info@bdsensors.de

BD|SENSORS
pressure measurement

BD|SENSORS
pressure measurement

Ordering code DS 201P

DS 201P □□□-□□□□-□-□-□-□□□-□□□-□-□-□-□□□

Pressure																								
gauge	7	8	7																					
absolute	7	8	8																					
Input	**[bar]**																							
60				6	0	0	2																	
100				1	0	0	3																	
160				1	6	0	3																	
250				2	5	0	3																	
400				4	0	0	3																	
customer				9	9	9	9																	consult
Analogue output																								
without								0																
4 … 20 mA / 2-wire								1																
0 … 10 V / 3-wire								3																
4 … 20 mA / 3-wire, adjustable								7																
Intrinsic safety 4 … 20 mA / 2-wire [1]								E																
customer								9																consult
Contact																								
1 contact [1, 2]									1															
2 contacts [1, 2]									2															
4 contacts									4															
Accuracy																								
0.5 %										5														
customer										9														consult
Electrical connection																								
Male plug M12x1 (5-pin) / plastic version											N	0	1											
Male plug M12x1 (8-pin) / plastic version [3]											M	5	0											
Male plug M12x1 (5-pin) / metal version											N	1	1											
Male and female plug ISO 4400 [2]											1	0	0											
Male plug Binder series 723 (5-pin)											2	0	0											
Cable outlet incl. cable [4]											T	A	0											
customer											9	9	9											consult
Mechanical connection																								
G1/2" DIN 3852 with flush diaphragm														Z	0	0								
G3/4" DIN 3852 with flush diaphragm														Z	3	0								
G1" DIN 3852 with flush diaphragm														Z	3	1								
G 1/2" DIN 3852 with rad. o-ring and flush diaphragm														Z	6	1								
customer														9	9	9								consult
Diaphragm																								
Stainless steel 1.4435 (316L)																	1							
customer																	9							
Seals																								
FKM																		1						
FFKM [5]																		7						
customer																		9						consult
Filling Fluids																								
Silicon oil																			1					
food compatible oil																			2					
customer																			9					consult
Special version																								
standard																				0	0	0		
with cooling element up to 300°C [6]																				2	0	0		
customer																				9	9	9		consult

[1] with Ex version max. 1 contact is possible
[2] with connector ISO 4400 and output 2-wire version only max. 1 contact possible; with 3-wire version no contact possible
[3] 4 contacts and M12x1, 8-pin only possible in combination and together with 4 ... 20 mA/3-wire; 0 ... 10 V/3-wire on request
[4] standard: 2 m PVC cable without ventilation tube (permissible temperature: -5 … 70 °C), others on request
[5] possible for nominal pressure ranges $P_N \leq 100$ bar
[6] cooling element up to 300°C not possible for pressure range $P_N > 160$ bar

This dokument contains product specification; properties are not guaranteed. Detailed information about options are defined in the datasheet. Subject to change without notice.

13.02.2013

BD|SENSORS GmbH
BD-Sensors-Straße 1
D - 95199 Thierstein

Tel. +49 (0) 9235 / 98 11 - 0
Fax +49 (0) 9235 / 98 11 - 11

www.bdsensors.de
www.bdsensors.com
info@bdsensors.de